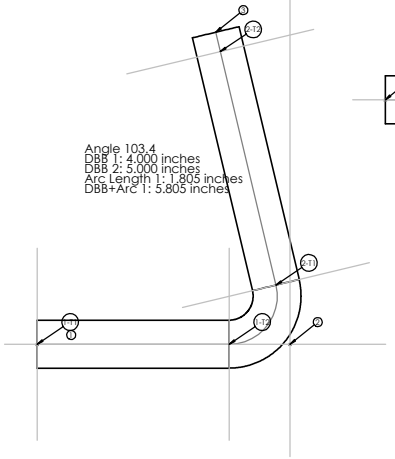

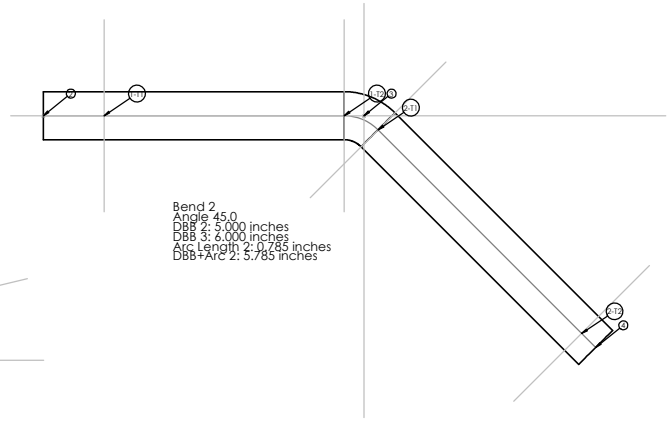

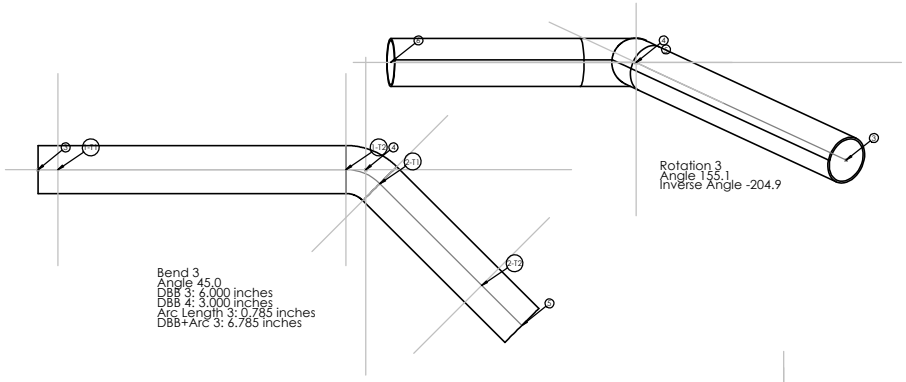

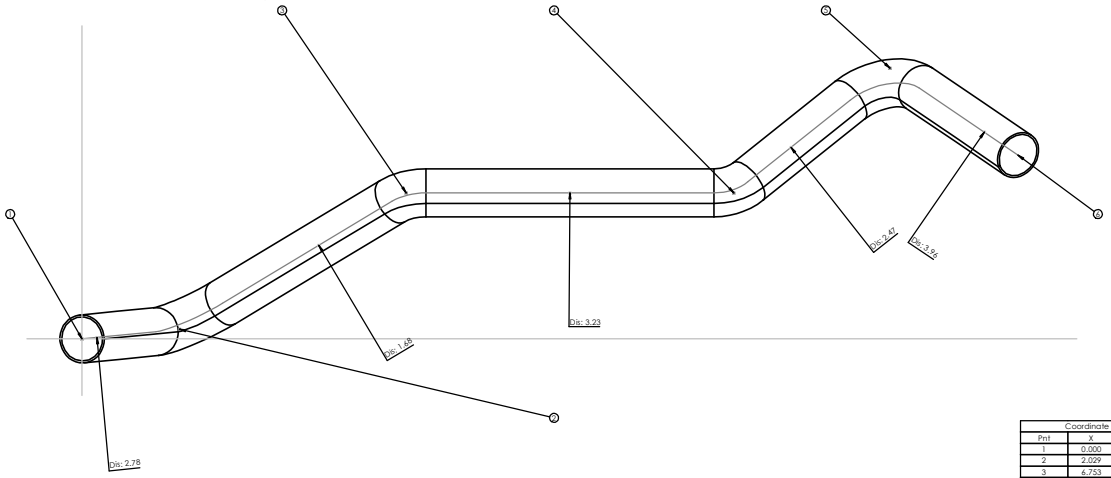

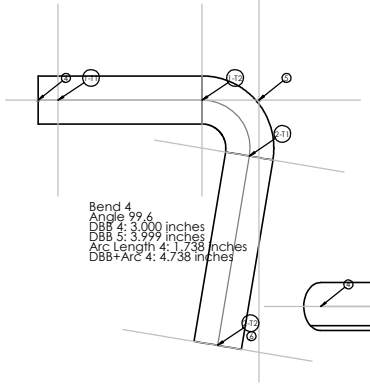

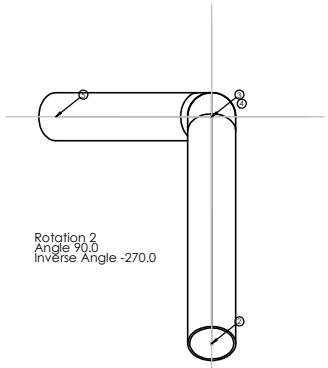

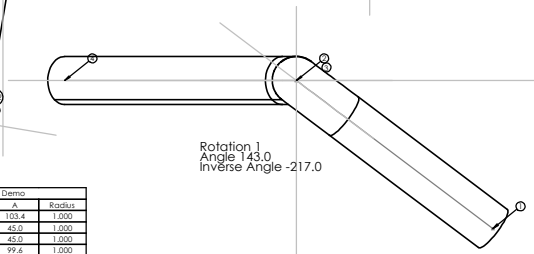

Coordinate Table- Tube Layout Demo				
Pnt	X	Y	Z	Radius
1	0.000	0.000	0.000	0.000
2	2.029	-4.856	-0.201	1.000
3	6.753	-1.083	-3.044	1.000
4	13.581	-1.083	-3.044	1.000
5	16.832	-3.039	-5.640	1.000
6	19.500	1.018	-3.831	0.000

LRA Table- Tube Layout Demo				
Bend	L	R	A	Radius
1	4.000	0.0	103.4	1.000
2	5.000	143.0	45.0	1.000
3	6.000	90.0	45.0	1.000
4	3.000	155.1	99.6	1.000
LL	4.000			

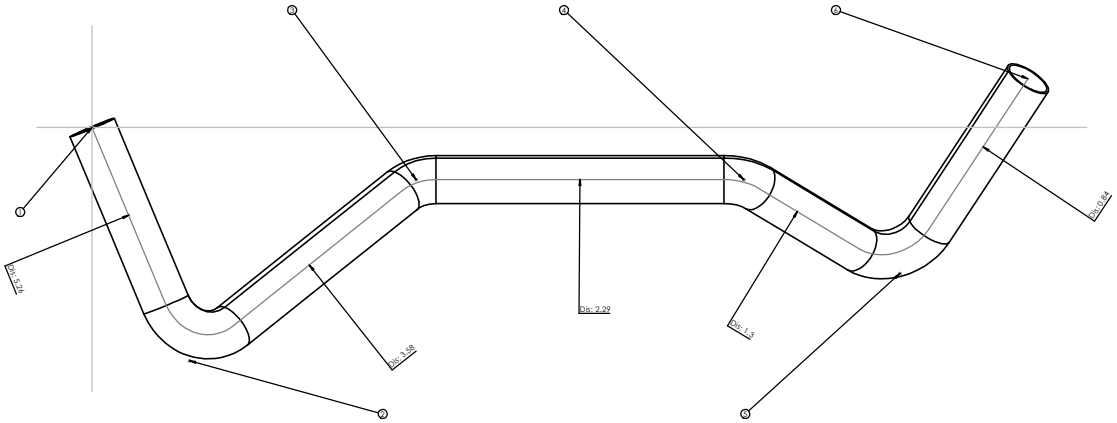

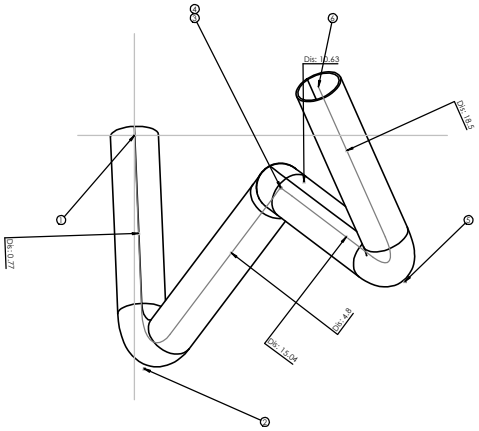

PROPRIETARY AND CONFIDENTIAL:
THE INFORMATION CONTAINED IN THIS DRAWING IS THE SOLE PROPERTY OF <INSERT COMPANY NAME HERE>. ANY REPRODUCTION IN PART OR AS A WHOLE WITHOUT THE WRITTEN PERMISSION OF <INSERT COMPANY NAME HERE> IS PROHIBITED.

NEXT ASSY | USED ON
APPLICATION | DO NOT SCALE DRAWING

UNLESS OTHERWISE SPECIFIED:
DIMENSIONS ARE IN INCHES
TOLERANCES:
FRACTIONAL ±
ANGULAR: MACH ± BEND ±
TWO PLACE DECIMAL ±
THREE PLACE DECIMAL ±
INTERPRET GEOMETRIC TOLERANCING PER:
MATERIAL
FINISH

	NAME	DATE
DRAWN		
CHECKED		
ENG APPR.		
MFG APPR.		
Q.A.		
COMMENTS:		

TITLE:

SIZE E | DWG. NO. Draw6 | REV

SCALE: 1:1 WEIGHT: SHEET 1 OF 1